STRUCTURE	STATION	SPAN	UPRIGHT	CHORD	VERTICAL STRUT	VERTICAL DIAGONAL	HORIZ STRUT/DIAG	CAMBER	POST TILT	BOLTS @ CHORD	ANCHOR BOLTS QTY	ANCHOR BOLTS SIZE	ANCHOR BOLTS EMBED	GUSSET REQ'D	"A"	"B"	"C"	"D"	"F"	"G"	"H"	"K"	"L"	DESIGN SIGN AREA
OH–19	18+18.94(EB)	48'–0	30.000 x .500	4.500 x .237	1.900 x .145	1.900 x .145	1.900 x .200	6	5/8	12	12	1 3/4	3'–6	12	20'–0	4'–0	3'–6	1 3/4	5/16	1/4	6 – 3/4	3/4	1/4	399.5
OH–29	209+50.04(SB)	46'–1	30.000 x .500	4.500 x .237	1.660 x .140	1.660 x .140	1.900 x .200	5 3/4	7/8	12	12	1 3/4	3'–6	12	26'–4 1/2	4'–0	3'–6	1 3/4	5/16	1/4	4 – 7/8	3/4	1/4	312.5
1 OH–30	38+93.47(SB)	43'–0	30.000 x .375	3.500 x .216	1.660 x .140	1.660 x .140	1.900 x .200	5 3/8	15/16	10	8	2	3'–6	8	25'–2	4'–0	3'–6	2	5/16	1/4	4 – 7/8	3/4	1/4	315.5
OH–31A	51+00(EB)	34'–0	24.000 x .375	3.500 x .188	1.315 x .133	1.315 x .133	1.660 x .140	4 1/4	3/4	6	8	1 1/2	3'–6	8	23'–7 1/4	3'–6	3'–0	1 1/2	5/16	–	---	–	1/4	126.0
OH–31B	66+00(EB)	34'–0	24.000 x .375	3.500 x .188	1.315 x .133	1.315 x .133	1.660 x .140	4 1/4	13/16	6	8	1 1/2	3'–6	8	24'–10 3/4	3'–6	3'–0	1 1/2	5/16	–	---	–	1/4	126.0

NOTE: ALL PIPE SIZES ARE OUTSIDE DIAMETER

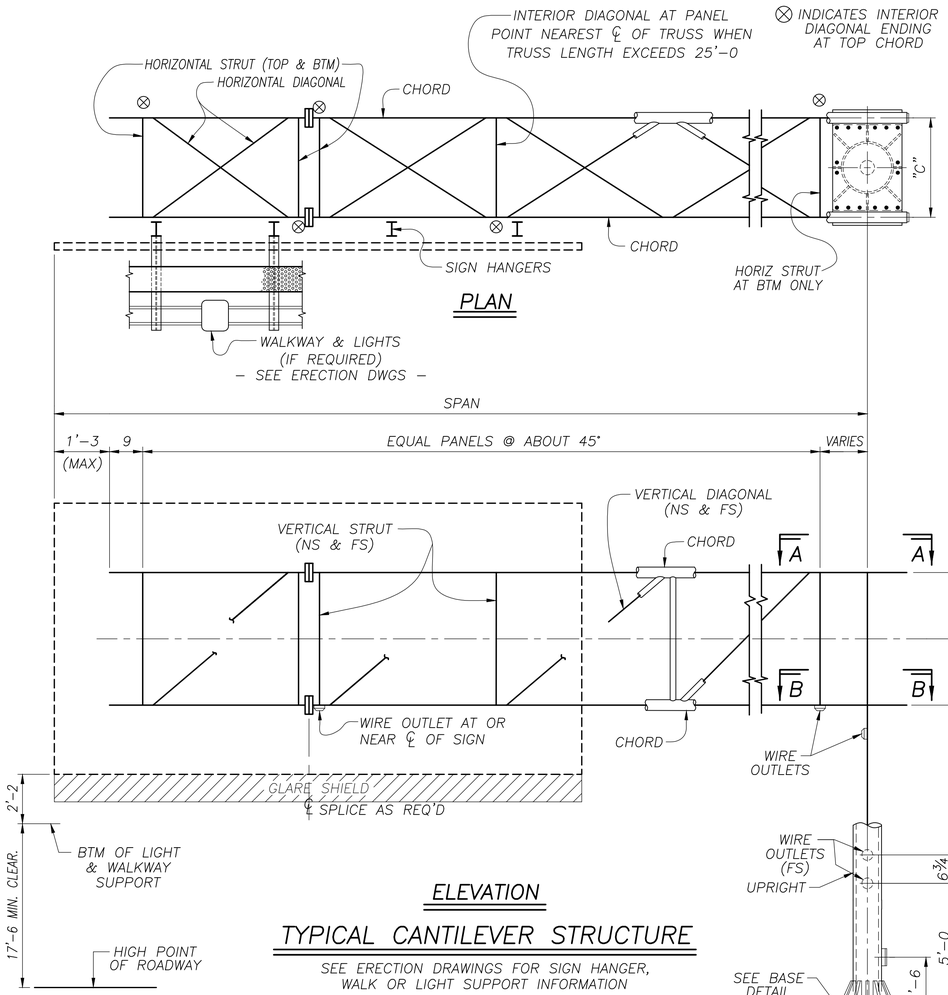

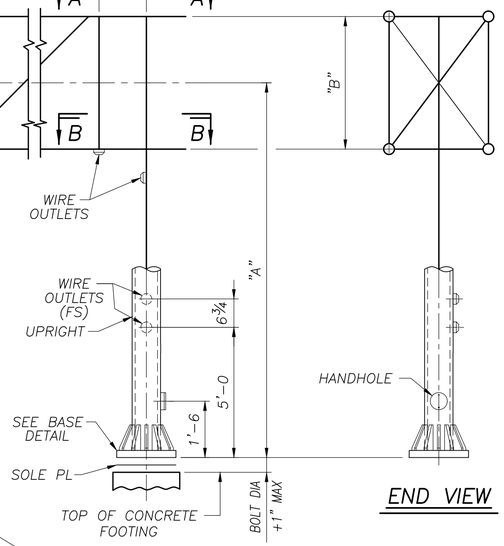

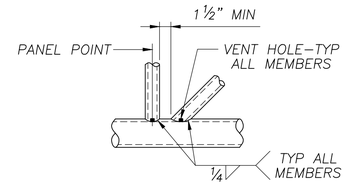

TYP DETAIL AT PANEL POINT

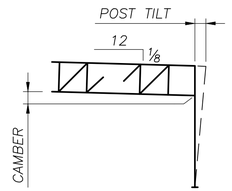

CAMBER DIAGRAM

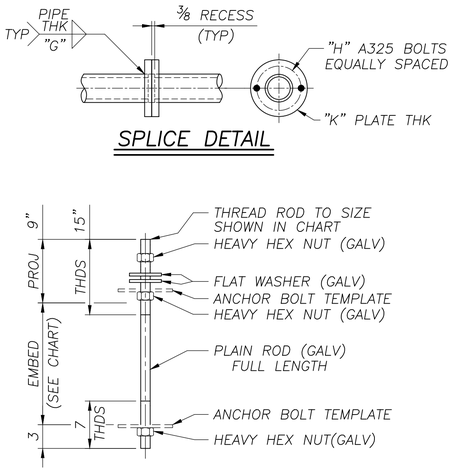

SPLICE DETAIL

ANCHOR DETAIL

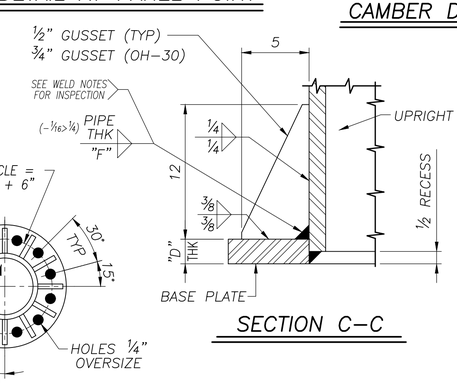

SECTION C–C

TYP BASE DETAIL
(FOR 12 ANCHOR BOLTS)

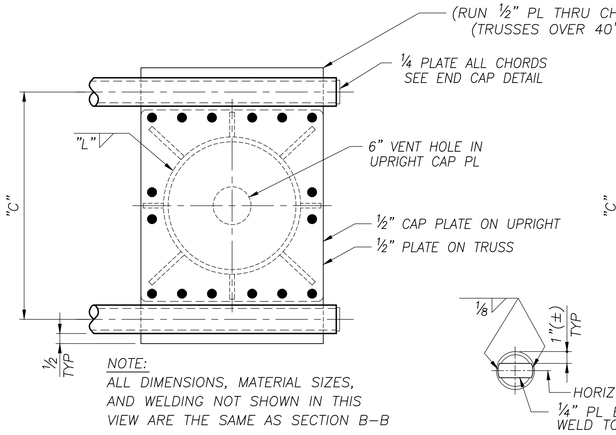

SECTION A–A
TOP CHORD CONNECTION

END CAP DETAIL

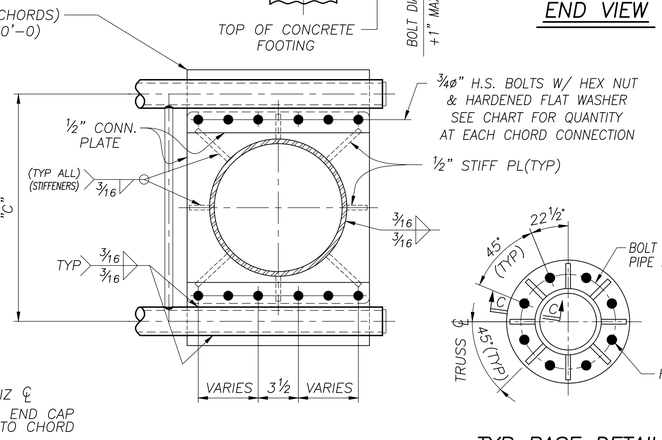

SECTION B–B
BOTTOM CHORD CONNECTION

TYP BASE DETAIL
(FOR 8 ANCHOR BOLTS)

NOTE:
SEE GENERAL NOTES DRAWING FOR MATERIAL SPECIFICATIONS, FOUNDATION AND STANDARD NOTES

GROUP 2

AASHTO 6th Edition Spec's

SCDOT
South Carolina Department of Transportation
ACCEPTED
X AS NOTED
REVIEWED BY: John Egan 8/22/24
DATE

SEALED BY:



Jul 3 2024

NO:	REVISIONS	DATE	MADE	CHECKED
1	REVISED OH–30 FOR NEW SPAN LENGTH	4/15/24	IWL	DAL

walpar
A valmont COMPANY
POST OFFICE BOX 28650
BIRMINGHAM ALABAMA 35228
4200 JEFFERSON AVENUE
BIRMINGHAM ALABAMA 35221
PHONE (205)–925–4990
FAX (205) 925–7273

STATE:	South Carolina
FED PROJ:	Carolina Crossroads Phase 1 & 2
ST PROJ:	P039718
COUNTY:	Lexington & Richland
ROUTE:	I–26 & I–126
SUBJECT:	BOX TRUSS CANTILEVER SIGN SUPPORTS WALPAR STANDARD DESIGN
FOR:	Archer–United Joint Venture
DRAWN BY:	IWL DATE: 8/24/23
CHECKED BY:	RRW DATE: 10/25/23
DWG NO:	C3546–D10

BTCT–D

NAME: E:\acad\Djobs\SC\3546\3546–D10.dwg DATE: APR 15, 2024 TIME: 4:23 PM dl706291

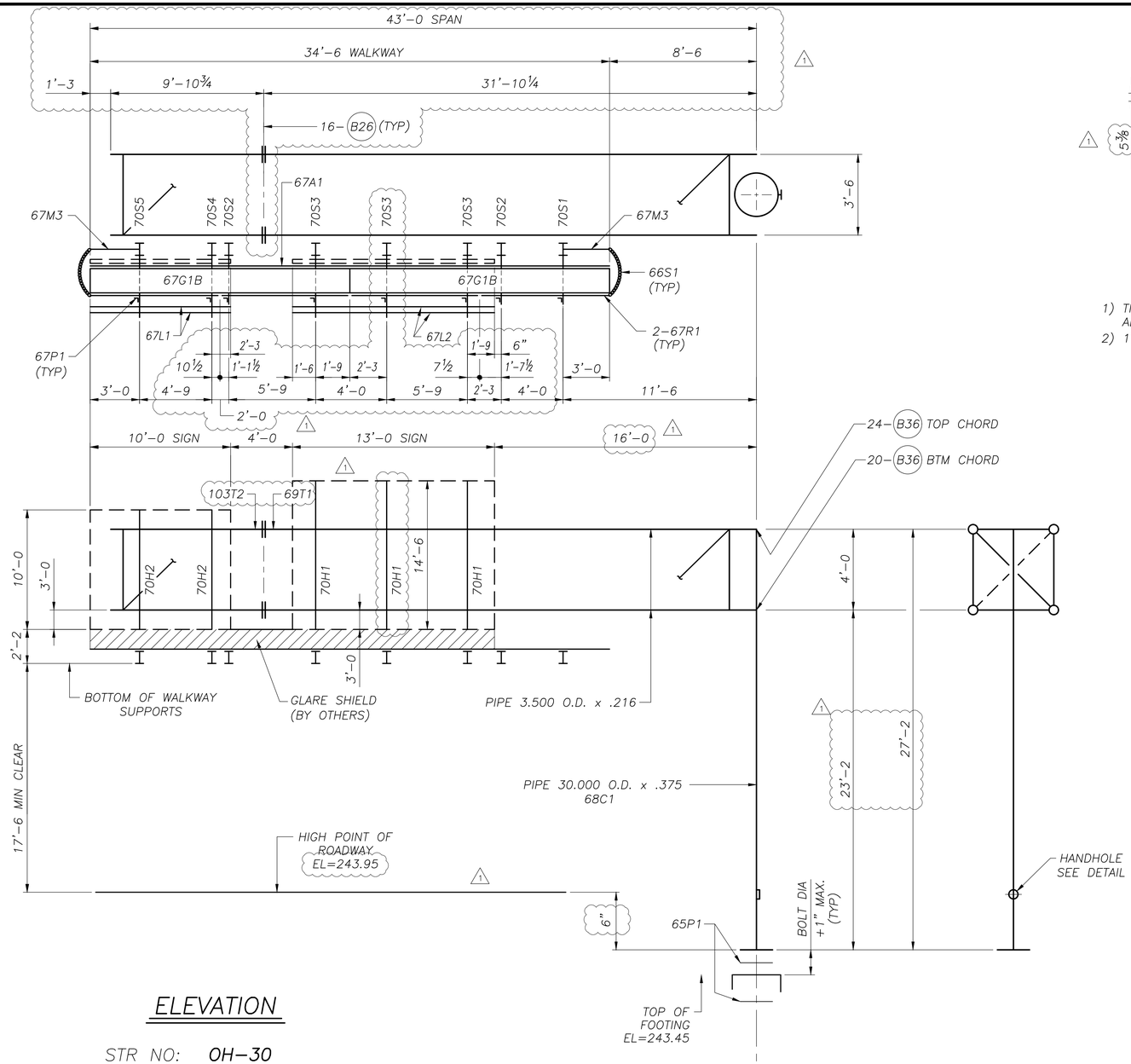

ELEVATION

STR NO: OH-30

STA NO: 38+93.47(SB)

(LOOKING IN DIRECTION OF TRAFFIC FLOW)

NOTE: STRUCTURE SHALL NOT BE ERECTED WITHOUT SIGNS, SIGN HGR'S OR A SUITABLE VIBRATION DAMPER

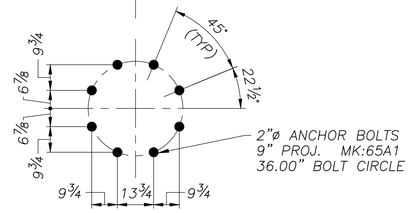

ANCHOR BOLT PLAN

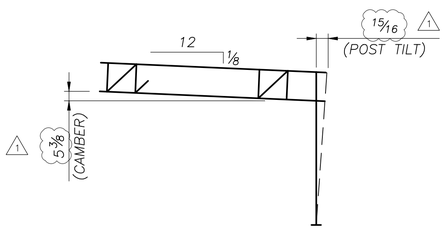

CAMBER DIAGRAM

ERECTION NOTE

1) TILT POST AWAY FROM ROADWAY AT ERECTION BY ADJUSTING LEVELING NUTS.
2) 1" MINIMUM PERMANENT CAMBER AFTER DEFLECTION.

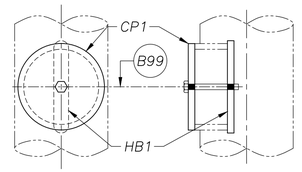

HANDHOLE DETAIL

PRE ASSEMBLE CP1 TO HB1 WITH B99 BOLT. DISTURB THREADS SO HB1 CAN NOT BE REMOVED. INSTALL COVER ASSEMBLY INTO HANDHOLE OPENING AND TIGHTEN BOLT TO SECURE.

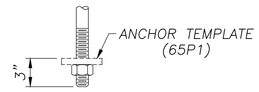

ANCHOR DETAIL

(TYPICAL)

PREVIOUSLY SHIPPED

SHIPPING LIST QTY	MARK	DESCRIPTION
8	65A1	ANCHOR BOLTS
2	65P1	ANCHOR TEMPLATES
1	69T1	CANTILEVER TRUSS 4.3' x 4.8' x 33.5'
1	103T2	CANTILEVER TRUSS 4.3' x 4.8' x 9.9'
1	68C1	CANTILEVER POST 3.4' x 3.4' x 27.1'
1	70S1	WALK SUPPORTS
2	70S2	WALK SUPPORTS
2	67M3	SAFETY CHAIN SUPPORT
2	66S1	SAFETY CHAIN
8	66P1	HINGE PIN ASSEMBLIES
16	67M1	CLAMP PLATES
2	67M2	SPLICE PLATES
8	67P1	HANDRAIL POSTS
8	67R1	HANDRAILS
1	67A1	SAFETY ANGLES
2	67G1B	GRATING
3	70S3	SIGN/WALK/LIGHT SUPPORTS
1	70S4	SIGN/WALK/LIGHT SUPPORT
1	70S5	SIGN/WALK/LIGHT SUPPORT
3	70H1	SIGN HANGERS (ANGLE ARM)
2	70H2	SIGN HANGERS (ANGLE ARM)
5	66M1	EYEBOLT ASSEMBLIES
2	67L1	LIGHT SUPPORTS
2	67L2	LIGHT SUPPORTS
1	CP1	COVER PLATE ASSEMBLY
1	HB1	HANDHOLE BAR
38	B1	3/8" x 1 1/4" BOLT w/HN/LW (A307 GALV)
16	B3	1 3/8" OD x 14 GA WASHER (A307 GALV)
5	B4	3/4" x 2 1/2" HHB w/HN/FW/LW (A325 GALV)
5	B5	3/4" x 2" HHB w/HN/LW (A325 GALV)
8	B6	1/2" x 1 1/2" HHB w/HN/LW (A325 GALV)
16	B26	7/8" x 3" HHB w/HN/FW/DTI (A325 GALV)
44	B36	3/4" x 2 1/2" HHB w/HN/FW/DTI (A325 GALV)
1	B99	1/4" x 4" HHB (A307 GALV)
16	U1	5/16" U-Bolts w/(2 ea) HN/LW (ZINC PL)
30	U3	1/2" U-Bolts w/(2 ea) HN/LW/FW (GALV)

32

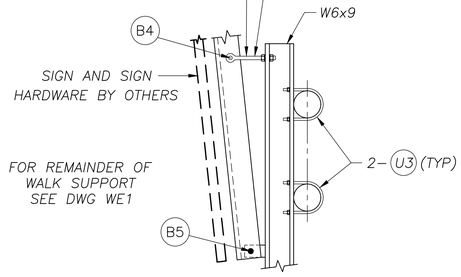

TYP SECTION THRU SIGN SUPPORT & SIGN HANGER

NOTE:
SEE GENERAL NOTES DRAWING FOR MATERIAL SPECIFICATIONS, FOUNDATION AND STANDARD NOTES

DESIGN DWGS: D10, D12, D14 DESIGN NO: BC4 **AASHTO 6th Edition Spec's**

OH-30

SEALED BY:

SOUTH CAROLINA REGISTERED PROFESSIONAL ENGINEER ROBERT R WIGINTON No. 35290

Jul 3 2024

walpar
A valmont COMPANY
POST OFFICE BOX 28650
BIRMINGHAM ALABAMA 35228
4200 JEFFERSON AVENUE
BIRMINGHAM ALABAMA 35221
PHONE (205)-925-4990
FAX (205) 925-7273

STATE:	South Carolina
FED PROJ:	Carolina Crossroads Phase 1 & 2
ST PROJ:	P039718
COUNTY:	Lexington & Richland
ROUTE:	I-26 & I-126
SUBJECT:	CANTILEVER SIGN SUPPORT ERECTION DRAWING
FOR:	Archer-United Joint Venture
DRAWN BY:	DLK DATE: 9/29/23
CHECKED BY:	DLJ DATE: 10/16/23
DWG NO:	C3546-E10

NO:	REVISIONS	DATE	MADE	CHECKED
1	REVISED PER SPAN INCREASE & ELEVATION CHANGE	7/1/24	DLK	JSD

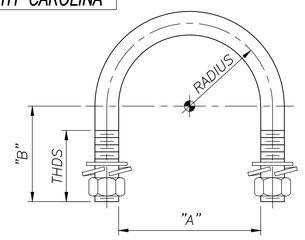

NOTE 1:
- UBOLT MATERIAL PROPERTIES TO MEET OR EXCEED A307
- GALV PER A153

NOTE 2:
- UBOLT MATERIAL PROPERTIES TO MEET OR EXCEED A307
- ZINC PL PER B633

~ U–BOLTS w/(2ea) HN/LW/FW ~

NUTS: ASTM A563,GR.DH OR ASTM A194,GR.2H
WASHERS: ASTM F436 & ANSI–B18.21.1

MARK	QTY	DIA	"A"	"B"	RADIUS	THDS	MATERIAL
U1	16	5/16	1 11/16	1 5/8	1	1 1/4	NOTE 2
U3	32	1/2	3 5/8	3 3/4	2 1/16	2	NOTE 1

1

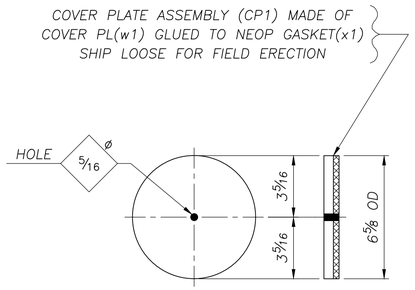

1 ~ COVER PLATE ASSEMBLY ~ CP1

PART MARK NO	NO OF PIECES REQ'D	SECTION SYM	DESCRIPTION OF MATERIAL	LENGTH FEET	LENGTH INCHES	PARTS FOR ONE UNIT
CP1	1		COVER PLATE ASSEMBLY			
w1	1	PL	1/4 x 6 5/8 DIA. (GALV A123)	–	–	1
x1	1	OP	1/8 x 6 5/8 DIA. (NEOP GASKET)	–	–	1

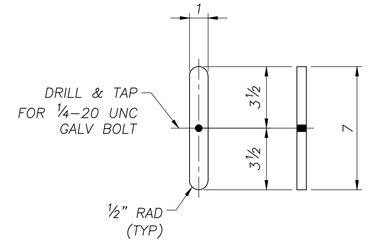

1 ~ HANDHOLE BAR ~ HB1

PART MARK NO	NO OF PIECES REQ'D	SECTION SYM	DESCRIPTION OF MATERIAL	LENGTH FEET	LENGTH INCHES	PARTS FOR ONE UNIT
HB1	1		HANDHOLE BAR			
w2	1	PL	1/4 x 1 (GALV A123)	0	7	1

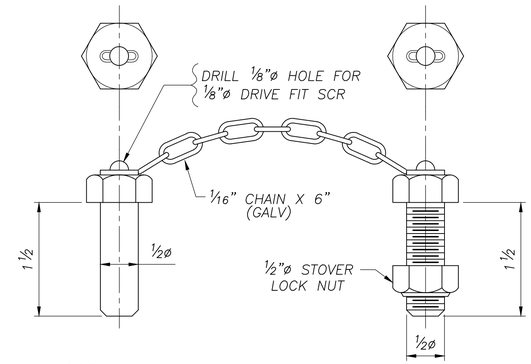

1 **8 ~ HINGE PIN ASSEMBLY ~ 66P1**

MAT'L SPECS: ASTM A307 (ZINC PL UN)

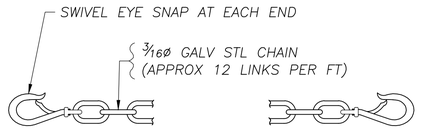

~ SAFETY CHAIN ~

MARK	QTY	LENGTH
66S1	2	4'–6

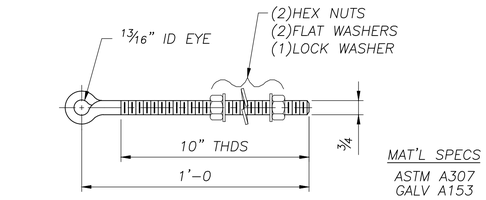

MAT'L SPECS
ASTM A307
GALV A153

1 **5 ~ EYE BOLT ASSEMBLY ~ 66M1**

NUTS: ASTM A563,GR.DH OR ASTM A194,GR.2H
WASHERS: ASTM F436 & ANSI–B18.21.1

NOTE:
SEE GENERAL NOTES DRAWING FOR MATERIAL SPECIFICATIONS, FOUNDATION AND STANDARD NOTES

REF DWGS: E10

OH–30

AASHTO 6th Edition Spec's

SEALED BY:



Jul 3 2024

walpar
A valmont COMPANY
POST OFFICE BOX 28650
BIRMINGHAM ALABAMA 35228
4200 JEFFERSON AVENUE
BIRMINGHAM ALABAMA 35221
PHONE (205)–925–4990
FAX (205) 925–7273

STATE:	South Carolina
FED PROJ:	Carolina Crossroads Phase 1 & 2
ST PROJ:	P039718
COUNTY:	Lexington & Richland
ROUTE:	I–26 & I–126
SUBJECT:	SIGN STRUCTURES MISC DETAILS
FOR:	Archer–United Joint Venture
DRAWN BY:	DLK DATE: 9/29/23
CHECKED BY:	DLJ DATE: 10/16/23
DWG NO:	C3546–66

NO:	REVISIONS	DATE	MADE	CHECKED
1	REVISED QUANTITIES PER SPAN INCREASE	7/1/24	DLK	JSD

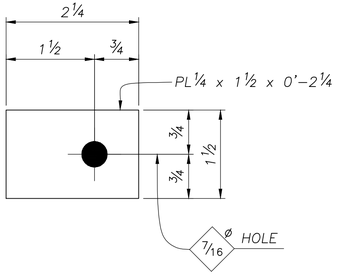

△1 (16) ~ CLAMP PLATES ~ 67M1

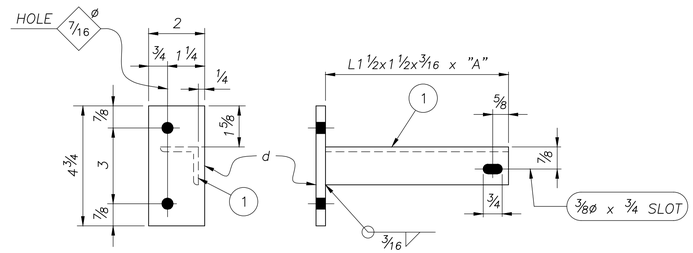

~ SAFETY CHAIN SUPPORT ~

(SEE CHART)

MARK	QTY	"A"	(1)
67M3	2	3'-0	f

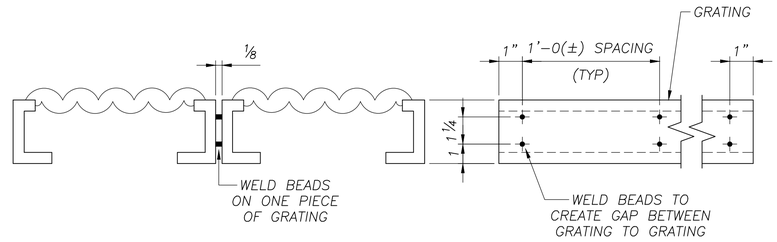

GRATING GAP DETAIL

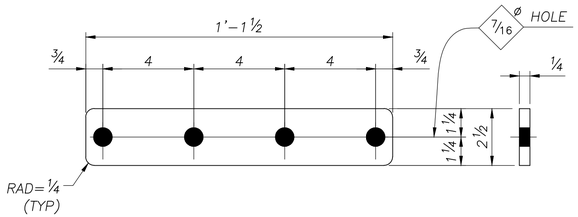

2 ~ SPLICE PLATES ~ 67M2

(FOR GRATING)

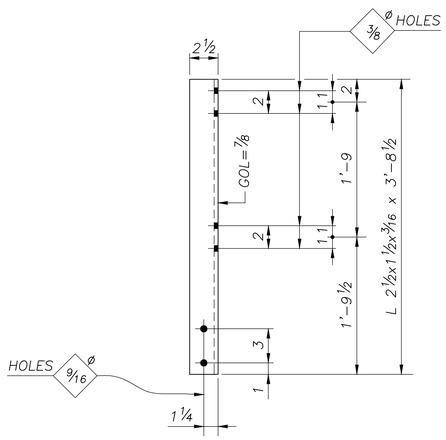

△1 (8) ~ HANDRAIL POSTS ~ 67P1

(ALUMINUM)

SHOP NOTE:

GRATING TO BE "GRIP STRUT", OR EQUAL SAFETY GRATING 3" DEEP, FORMED FROM 12 GA SHEETS GALV AFTER FAB WELDED TOGETHER IN A COMBINATION OF THESE SIZES
(1) #8 DIAMOND 18 3/4" WIDE – CAT# 83012 AND
(1) #5 DIAMOND 11 3/4" WIDE – CAT# 53012

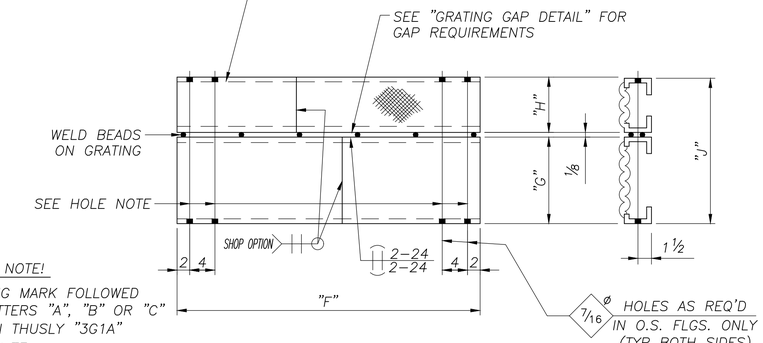

HOLE NOTE!

GRATING MARK FOLLOWED BY LETTERS "A", "B" OR "C" SHOWN THUSLY "3G1A" DESIGNATE:
"A" – NO HOLES
"B" – HOLES 1–END
"C" – HOLES BOTH ENDS

~ GRATING ~

(SEE CHART)

MARK	QTY	"F"	"G"	"H"	"J"
67G1B	2	17'-3	1'-6 3/4	11 3/4	2'-6 5/8

△1

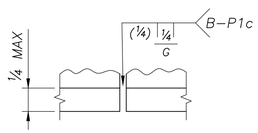

TOE ANGLE SPLICE

(OPTIONAL)

C3546-67

PARTS PER CONT	PART MARK NO	NO OF PIECES REQ'D	SECTION SYM	DESCRIPTION OF MATERIAL	LENGTH FEET	LENGTH INCHES	PARTS FOR ONE UNIT	
	67M1	16		CLAMP PLATES				
△1	a	16	PL	1/4 x 1 1/2	0	2 1/4		
	67M2	2		SPLICE PLATES				
	b	2	PL	1/4 x 2 1/2	1	1 1/2		
	67M3	2		SAFETY CHAIN SUPPORT				
	d	2	PL	1/4 x 2	0	4 3/4		
	f	2	L	1 1/2 x 1 1/2 x 3/16	3	0		
	67G1B	2		GRATING				
△1	g	2	GRT	18 3/4 WIDE	17	3		
	n	2	GRT	11 3/4 WIDE	17	3		
	67P1	8		HANDRAIL POSTS				
△1	h	8	ALL	2 1/2 x 1 1/2 x 3/16 (ALUM 6061)	3	8 1/2		
	67R1	8		HANDRAIL				
△1	k	8	ALPI	1.660 x .140 (ALUM 6061)	8	7 1/2		
	67A1	1		SAFETY ANGLE				
△1	m	1	L	4 x 3 x 1/4	34	6		
	67L1	2		LIGHTING SUPPORTS (ALUM 6063-T6)				
	p	2	ALUN	UNISTRUT 1 5/8 x 1 5/8 x .105	10	0		
	67L2	2		LIGHTING SUPPORTS (ALUM 6063-T6)				
	ap	2	ALUN	UNISTRUT 1 5/8 x 1 5/8 x .105	13	0		

NOTE:

SEE GENERAL NOTES DRAWING FOR MATERIAL SPECIFICATIONS, FOUNDATION AND STANDARD NOTES

REF DWG: E10

OH-30

AASHTO 6th Edition Spec's

SEALED BY:

SOUTH CAROLINA PROFESSIONAL ENGINEER
Robert R Wigington
No. 35290
ROBERT R WIGINGTON

Jul 3 2024

NO:	REVISIONS	DATE	MADE	CHECKED
△1	REVISED QUANTITES PER SPAN INCREASE	7/1/24	DLK	JSD

walpar
A valmont COMPANY
POST OFFICE BOX 28650
BIRMINGHAM ALABAMA 35228
4200 JEFFERSON AVENUE
BIRMINGHAM ALABAMA 35221
PHONE (205)-925-4990
FAX (205) 925-7273

△1

STATE: South Carolina
FED PROJ: Carolina Crossroads Phase 1 & 2
ST PROJ: P039718
COUNTY: Lexington & Richland
ROUTE: I-26 & I-126

SUBJECT: SIGN STRUCTURE
MISC DETAILS
FOR: Archer-United Joint Venture

DRAWN BY: DLK DATE: 10/2/23
CHECKED BY: DLJ DATE: 10/16/23
DWG NO: C3546-67

MARK	QTY	"A"	"B"	"C"	"D"	"E"	"F"	"G"	"H"
68C1	1	27'-1¾ 1	23'-1¾ 1	4'-0	3'-0	1'-3½	3 @ 5 = 1'-3	1'-5¼	4 @ 3¾ = 1'-3

MARK	"J"	"K"	"L"	"M"	"N" QTY	"N" DIA	"P"	"S"	"T"	1	2	3	4	5	6	7	8
68C1	2½	2 15/16	7½	5/16	8	2¼	2½	2'-6 1/16	¼	a	b	d	f	k	m	n	h

PARTS PER CONT	PART MARK NO	NO. OF PIECES REQ'D	SECTION SYM	DESCRIPTION OF MATERIAL	LENGTH FEET	LENGTH INCHES	PARTS FOR ONE UNIT
	68C1	1		CANTILEVER POST			
1	a	1	PIPE	30.000 x .375	27	0 15/16	
	b	1	PL	2 x 41 DIA.	–	–	
	d	1	PL	½ x 36	3	1	
	f	1	PL	½ x 36	3	1	
	k	4	PL	½ x 2½	0	2½	
	m	4	PL	½ x 2 15/16	0	2 15/16	
	n	8	PL	½ x 7½	0	7½	
	h	8	PL	¾ x 5	1	0	
	v1	1	PIPE	6.625 x .864	0	3	
	z1	3	OP	1¼" FORGED HALF CPLG (3000#)	–	–	

C3546-68

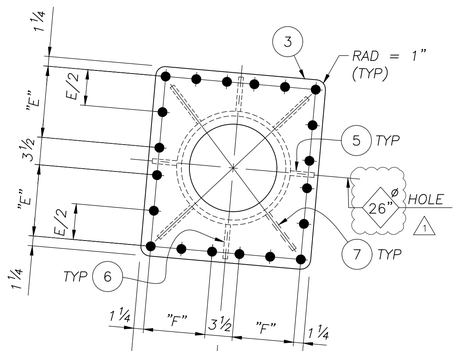

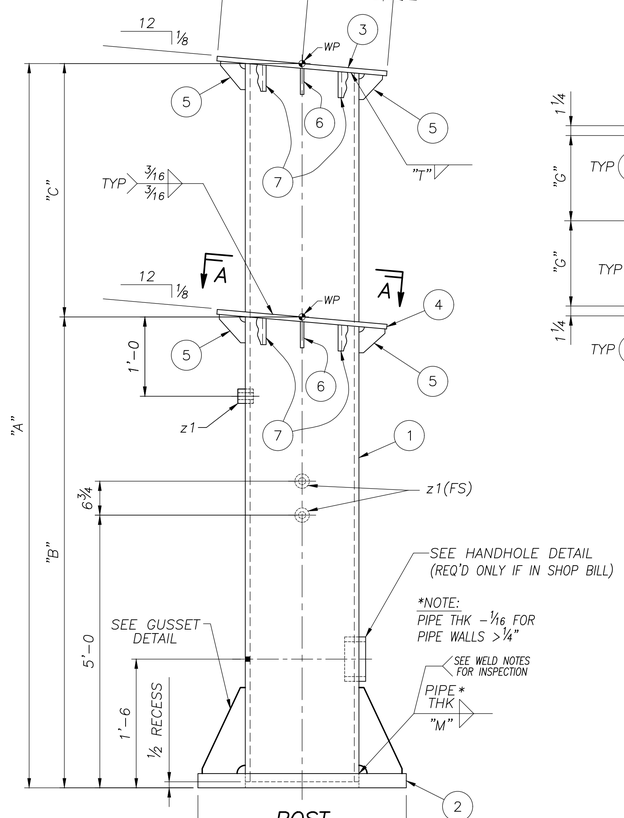

POST

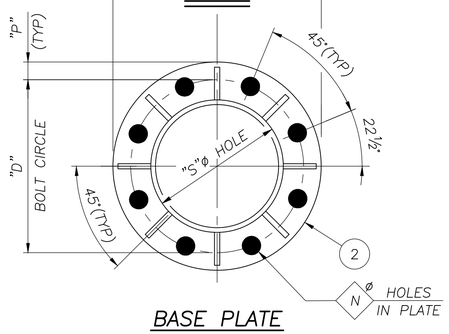

BASE PLATE

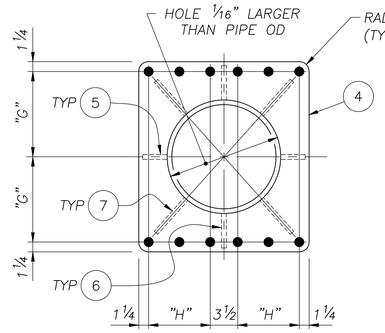

SECTION A–A

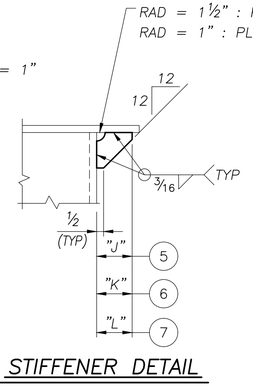

STIFFENER DETAIL

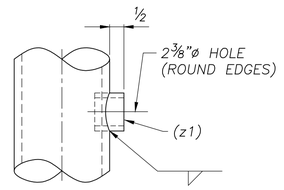

WIRE OUTLET DETAIL

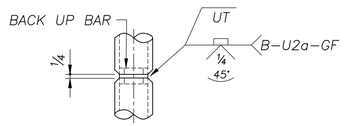

OPTIONAL SPLICE

(FOR WALL THK 5/16" OR GREATER ONLY)

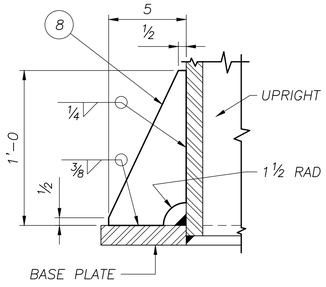

TYP GUSSET DETAIL

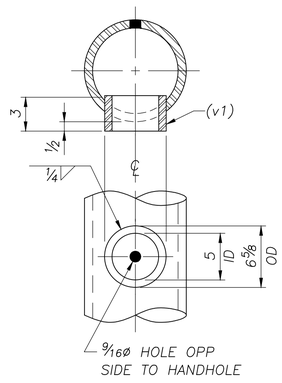

HANDHOLE DETAIL

NOTE:
ALL HOLES TO BE ⅞ ø UNLESS NOTED

NOTE:
SEE GENERAL NOTES DRAWING FOR MATERIAL SPECIFICATIONS, FOUNDATION AND STANDARD NOTES

REF DWG: E10

OH–30

AASHTO 6th Edition Spec's

SEALED BY:

SOUTH CAROLINA PROFESSIONAL ENGINEER ROBERT R WIGINTON No. 35290

Jul 3 2024

NO:	REVISIONS	DATE	MADE	CHECKED
1	REVISED UPRIGHT POST HEIGHT	7/1/24	DLK	JSD

walpar
A valmont COMPANY
POST OFFICE BOX 28650
BIRMINGHAM ALABAMA 35228
4200 JEFFERSON AVENUE
BIRMINGHAM ALABAMA 35221
PHONE (205)-925-4990
FAX (205) 925-7273

1

STATE:	South Carolina
FED PROJ:	Carolina Crossroads Phase 1 & 2
ST PROJ:	P039718
COUNTY:	Lexington & Richland
ROUTE:	I–26 & I–126
SUBJECT:	CANTILEVER SIGN SUPPORT DETAILS OF UPRIGHT
FOR:	Archer–United Joint Venture
DRAWN BY:	DLK DATE: 9/29/23
CHECKED BY:	DLJ DATE: 10/16/23
DWG NO:	C3546-68

CBTUPDET

NAME: E:\acad\JobsNPrg\3546\3546-68.dwg DATE: JUL 01, 2024 TIME: 8:49 PM jd706288

MARK	QTY	"A"	"C"	PANELS	"D"	"E"	"F"	"G"	"H"	"J"	"K"	"L"	"M"	"N"	"P"	"W"	"X"	"Y"	"Z"
69T1	1	33'–6	4'–0	7 @ 4'–2 3/8(±) = 29'–4 1/2	3'–6	1'–3 1/2	3 @ 5 = 1'–3	2'–10 1/2	4 @ 3 3/4 = 1'–3	13'–4 1/16	3'–4 1/2	3 3/4	1 1/2	2 1/2	4 1/2	1/4	1	6 1/2	4

△1 △1 △1

MARK	"R"	"S"	"T"	"V"	1	2	3	4	5	6	7	8	9	10	11
69T1	3'–10 1/2	24'–4 5/16	-------	-------	a	b	d	f	g	h	k	m	n	p	z1

△1

VENT HOLE SIZES	
WEB MEMBER (OD)	HOLE DIA ± 1/4"
< 3.500	3/4
3.500	1 3/4
4.000	2
4.500	2 1/4
5.563	2 3/4
6.625	3 1/4

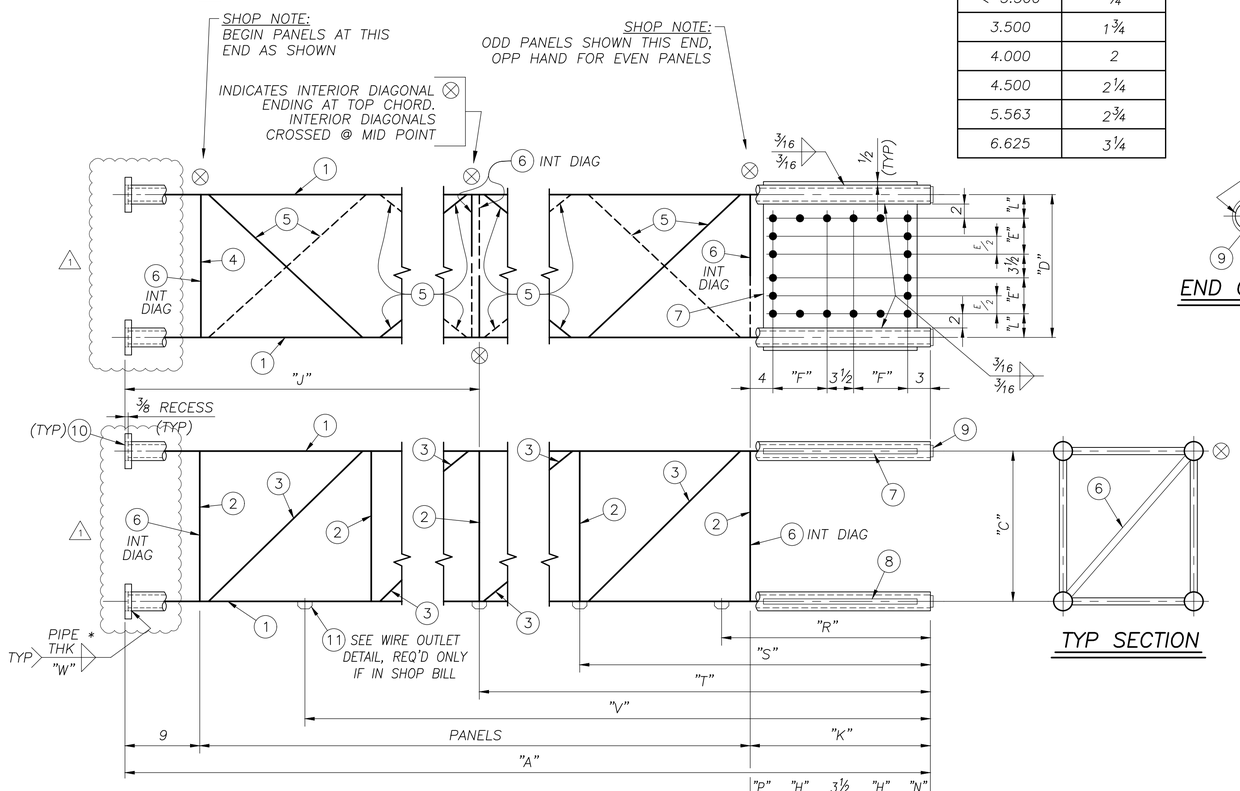

*NOTE: PIPE THK – 1/16" FOR PIPE WALLS > 1/4"

TRUSS

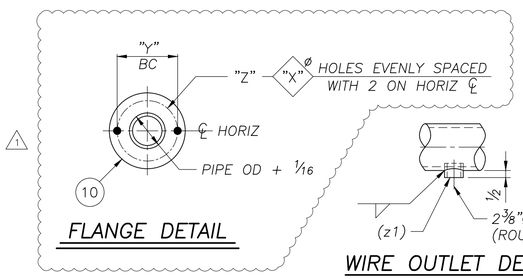

FLANGE DETAIL

WIRE OUTLET DETAIL

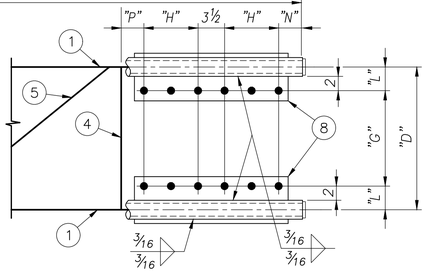

SHOP NOTE: INTERIOR DIAGONALS MAY BE OFFSET UP TO 6" FROM PANEL POINTS ON TRUSS IN ORDER TO AVOID INTERSECTING WELDS IN THE AREA OF OTHER WEB MEMBERS. DO NOT OFFSET MEMBERS SO AS TO INTERFERE WITH BOLTED CONNECTIONS AT FIELD SPLICES.

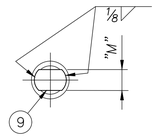

END CAP DETAIL

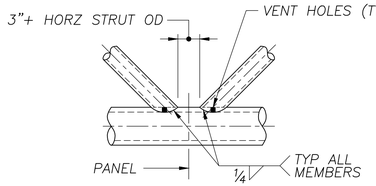

JOINT DETAIL

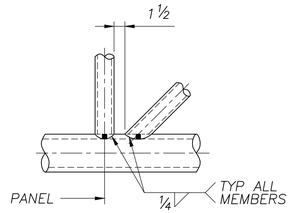

JOINT DETAIL

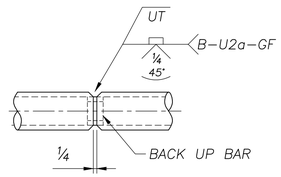

OPTIONAL CHORD SPLICE

(FOR WALL THK 5/16" OR GREATER ONLY)

NOTE:
ALL HOLES TO BE Ø 7/8 UNLESS NOTED

NOTE:
SEE GENERAL NOTES DRAWING FOR MATERIAL SPECIFICATIONS, FOUNDATION AND STANDARD NOTES

REF DWG: E10

AASHTO 6th Edition Spec's

C3546–69

PARTS PER CONT	PART MARK NO	NO OF PIECES REQ'D	SECTION SYM	DESCRIPTION OF MATERIAL	LENGTH FEET	LENGTH INCHES	PARTS FOR ONE UNIT
	69T1	1		CANTILEVER TRUSS			
	a	4	PIPE	3.500 x .216	33	5 5/8	
	b	16	PIPE	1.660 x .140	3	8 13/16	
	d	14	PIPE	1.660 x .140	5	3 13/16	
	f	3	PIPE	1.900 x .200	3	2 13/16	
	g	14	PIPE	1.900 x .200	4	11 9/16	
△1	h	4	PIPE	1.900 x .145	5	0 11/16	
	k	1	PL	1/2 x 36	3	10 1/2	
	m	2	PL	1/2 x 7 1/4	3	0	
	n	4	PL	1/4 x 1 1/2	0	3 1/4	
	p	4	PL	3/4 x 9 1/2 DIA.	–	–	
	z1	2	OP	1 1/4" FORGED HALF CPLG (3000#)	–	–	

OH–30

SEALED BY:

SOUTH CAROLINA PROFESSIONAL ENGINEER No. 35290 ROBERT R WIGINTON

Jul 3 2024

NO:	REVISIONS	DATE	MADE	CHECKED
△1	REVISED PER SPAN INCREASE	7/1/24	DLK	JSD

walpar
A valmont COMPANY
POST OFFICE BOX 28650
BIRMINGHAM ALABAMA 35228
4200 JEFFERSON AVENUE
BIRMINGHAM ALABAMA 35221
PHONE (205)–925–4990
FAX (205) 925–7273

△1

BTCTDET

STATE:	South Carolina
FED PROJ:	Carolina Crossroads Phase 1 & 2
ST PROJ:	P039718
COUNTY:	Lexington & Richland
ROUTE:	I–26 & I–126
SUBJECT:	CANTILEVER SIGN SUPPORT DETAIL OF TRUSS
FOR:	Archer–United Joint Venture
DRAWN BY:	DLK DATE: 9/29/23
CHECKED BY:	DLJ DATE: 10/16/23
DWG NO:	C3546–69

NAME: E:\acad\JobsNProg\3546\3546–69.dwg DATE: JUL 01, 2024 TIME: 8:54 PM jd706288

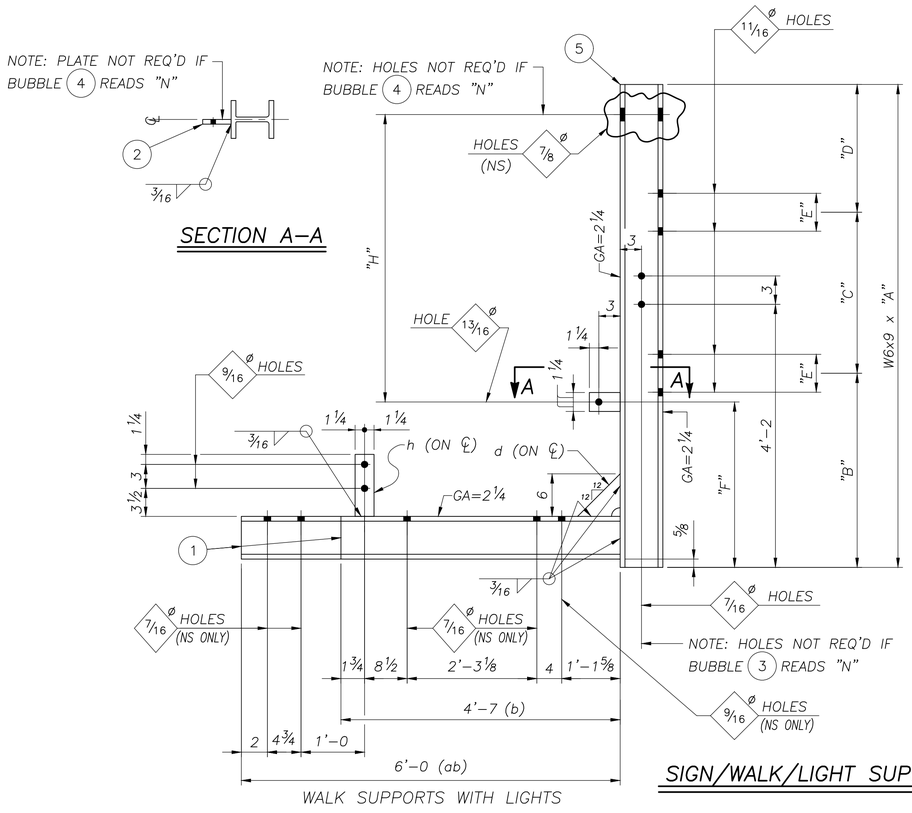

WALK SUPPORTS WITH LIGHTS

SIGN/WALK/LIGHT SUPPORTS

MARK	QTY	"A"	"B"	"C"	"D"	"E"	"F"	"H"	1	2	3	4	5
70S1	1	9'–8	5'–2	4'–0	6	4 1/8	----	----	b	–	Y	N	a
70S2	2	9'–8	5'–2	4'–0	6	4 1/8	----	----	b	–	N	N	aa
1 70S3	3	12'–2	5'–2	4'–0	3'–0	4 1/8	2'–3 1/4	9'–8	ab	f	N	Y	ba
70S4	1	9'–8	5'–2	4'–0	6	4 1/8	2'–3 1/4	6'–5	ab	f	N	Y	da
70S5	1	9'–8	5'–2	4'–0	6	4 1/8	2'–3 1/4	6'–5	ab	f	Y	Y	fa

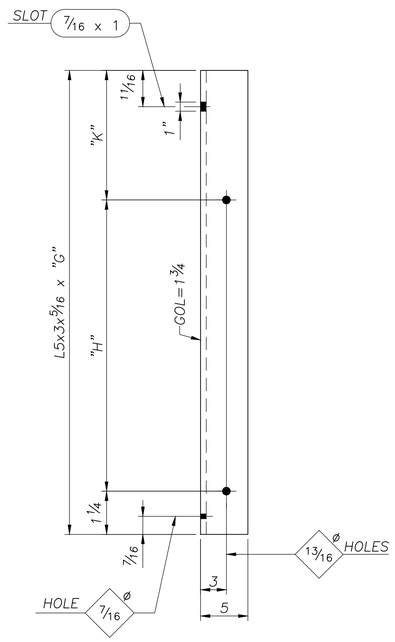

SIGN HANGERS

MARK	QTY	"G"	"H"	"K"
1 70H1	3	14'–6 1/4	9'–8	4'–9
70H2	2	10'–0 1/4	6'–5	3'–6

PARTS PER CONT	PART MARK NO	NO OF PIECES REQ'D	SECTION SYM	DESCRIPTION OF MATERIAL	LENGTH FEET	LENGTH INCHES	PARTS FOR ONE UNIT	
	70S1	1		WALK SUPPORT				
	a	1	W	6 x 9	9	8		
	b	1	W	6 x 9	4	7		
	d	1	PL	1/4 x 6	0	6		
	h	1	PL	1/2 x 2 1/2	0	7 3/4		
	70S2	2		WALK SUPPORTS				
	aa	2	W	6 x 9	9	8		
	b	2	W	6 x 9	4	7		
	d	2	PL	1/4 x 6	0	6		
	h	2	PL	1/2 x 2 1/2	0	7 3/4		
	70S3	3		SIGN/WALK/LIGHT SUPPORTS				
	ba	3	W	6 x 9	12	2		
	ab	3	W	6 x 9	6	0		
	d	3	PL	1/4 x 6	0	6		
	f	3	PL	3/8 x 2 1/2	0	4 1/4		
	h	3	PL	1/2 x 2 1/2	0	7 3/4		
	70S4	1		SIGN/WALK/LIGHT SUPPORT				
	da	1	W	6 x 9	9	8		
	ab	1	W	6 x 9	6	0		
	d	1	PL	1/4 x 6	0	6		
	f	1	PL	3/8 x 2 1/2	0	4 1/4		
	h	1	PL	1/2 x 2 1/2	0	7 3/4		
	70S5	1		SIGN/WALK/LIGHT SUPPORT				
	fa	1	W	6 x 9	9	8		
	ab	1	W	6 x 9	6	0		
	d	1	PL	1/4 x 6	0	6		
	f	1	PL	3/8 x 2 1/2	0	4 1/4		
	h	1	PL	1/2 x 2 1/2	0	7 3/4		
1	70H1	3		SIGN HANGERS				
	k	3	L	5 x 3 x 5/16	14	6 1/4		
	70H2	2		SIGN HANGERS				
	ak	2	L	5 x 3 x 5/16	10	0 1/4		

C3546–70

NOTE:
SEE GENERAL NOTES DRAWING FOR MATERIAL SPECIFICATIONS, FOUNDATION AND STANDARD NOTES

REF DWG: E10

OH–30

AASHTO 6th Edition Spec's

SEALED BY:

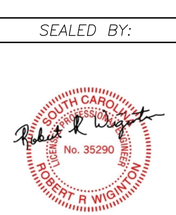

NO:	REVISIONS	DATE	MADE	CHECKED
1	REVISED QUANTITIES PER SPAN INCREASE	7/1/24	DLK	JSD

walpar
A valmont COMPANY
POST OFFICE BOX 28650
BIRMINGHAM ALABAMA 35228
4200 JEFFERSON AVENUE
BIRMINGHAM ALABAMA 35221
PHONE (205)–925–4990
FAX (205) 925–7273

1

STATE: South Carolina
FED PROJ: Carolina Crossroads Phase 1 & 2
ST PROJ: P039718
COUNTY: Lexington & Richland
ROUTE: I–26 & I–126

SUBJECT: SIGN SUPPORT
WALK SUPPORT & SIGN HANGER DETAILS

FOR: Archer–United Joint Venture

DRAWN BY: DLK DATE: 9/29/23
CHECKED BY: DLJ DATE: 10/16/23

DWG NO: C3546–70

SH–DET4

NAME: E:\acad\JobsNPrg\3546\3546–70.dwg DATE: JUL 01, 2024 TIME: 8:55 PM jd706288

MARK	QTY	"B"	"C"	PANELS	"D"								"M"			"W"	"X"	"Y"	"Z"
103T2	1	9'–10¾	4'–0	2 @ 4'–2⅜(±) = 8'–4¾	3'–6								1½			¼	1	6½	4

MARK		"S"	"T"	"V"	①	②	③	④	⑤	⑥			⑨	⑩	⑪
103T2		4'–11⅜	-------	-------	a	b	d	f	g	h			n	p	z1

					C3546–103	
PARTS PER CONT	PART MARK NO	NO OF PIECES REQ'D	SECTION SYM	DESCRIPTION OF MATERIAL	LENGTH FEET	LENGTH INCHES	PARTS FOR ONE UNIT
	103T2	1		CANTILEVER TRUSS			
	a	4	PIPE	3.500 x .216	9	10⅜	
	b	6	PIPE	1.660 x .140	3	8 13/16	
	d	4	PIPE	1.660 x .140	5	3 13/16	
	f	4	PIPE	1.900 x .200	3	2 13/16	
	g	4	PIPE	1.900 x .200	4	11 9/16	
	h	2	PIPE	1.900 x .145	5	0 1/16	
	n	4	PL	¼ x 1½	0	3¼	
	p	4	PL	¾ x 9½ DIA.	–	–	
	z1	1	OP	1¼" FORGED HALF CPLG (3000#)	–	–	

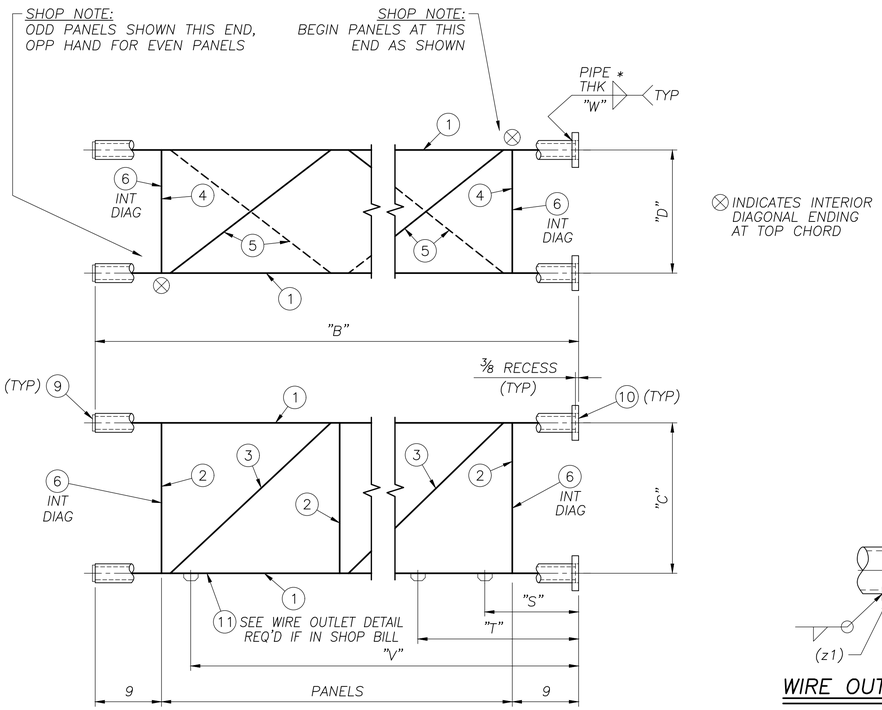

TRUSS

*NOTE: PIPE THK – 1/16" FOR PIPE WALLS > ¼"

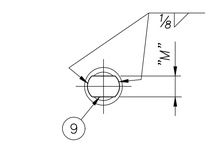

END CAP DETAIL

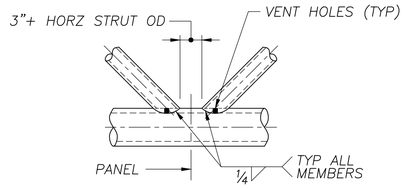

JOINT DETAIL

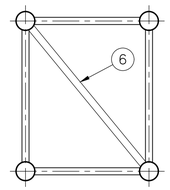

TYP SECTION

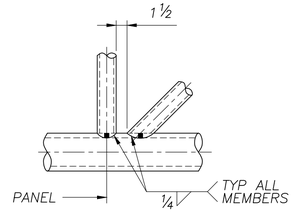

JOINT DETAIL

VENT HOLE SIZES	
WEB MEMBER OD	HOLE DIA ± ¼"
< 3.500	¾
3.500	1¾
4.000	2
4.500	2¼
5.563	2¾
6.625	3¼

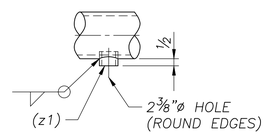

WIRE OUTLET DETAIL

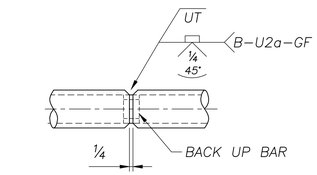

OPTIONAL CHORD SPLICE

(FOR WALL THK 5/16" OR GREATER ONLY)

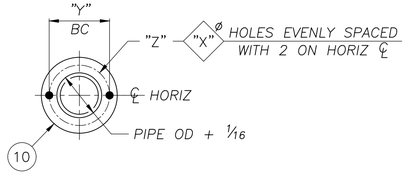

FLANGE DETAIL

SHOP NOTE:

INTERIOR DIAGONALS MAY BE OFFSET UP TO 6" FROM PANEL POINTS ON TRUSS IN ORDER TO AVOID INTERSECTING WELDS IN THE AREA OF OTHER WEB MEMBERS.

DO NOT OFFSET MEMBERS SO AS TO INTERFERE WITH BOLTED CONNECTIONS AT FIELD SPLICES.

NOTE:

SEE GENERAL NOTES DRAWING FOR MATERIAL SPECIFICATIONS, FOUNDATION AND STANDARD NOTES

REF DWG: E10

OH–30

AASHTO 6th Edition Spec's

SEALED BY:

SOUTH CAROLINA PROFESSIONAL ENGINEER ROBERT R WIGINTON No. 35290

Jul 3 2024

walpar A valmont COMPANY

POST OFFICE BOX 28650
BIRMINGHAM ALABAMA 35228
4200 JEFFERSON AVENUE
BIRMINGHAM ALABAMA 35221
PHONE (205)–925–4990
FAX (205) 925–7273

STATE:	South Carolina
FED PROJ:	Carolina Crossroads Phase 1 & 2
ST PROJ:	P039718
COUNTY:	Lexington & Richland
ROUTE:	I–26 & I–126
SUBJECT:	CANTILEVER SIGN SUPPORT DETAIL OF TRUSS
FOR:	Archer–United Joint Venture
DRAWN BY:	DLK DATE: 5/28/24
CHECKED BY:	JSD DATE: 7/1/24
DWG NO:	C3546–103

NO:	REVISIONS	DATE	MADE	CHECKED
0	CHECK COMPLETE	7/1/24	DLK	JSD

NAME: E:\acad\JobsNPrg\3546\3546–103.dwg DATE: JUL 01, 2024 TIME: 8:55 PM jd706288

CBTESDET

Subject Box Truss Cantilever Design Information Sheet C4
Job No C3546 By IWL Date 8/24/23
GROUP 2 Chk'd By DAL Date 4/15/24

1

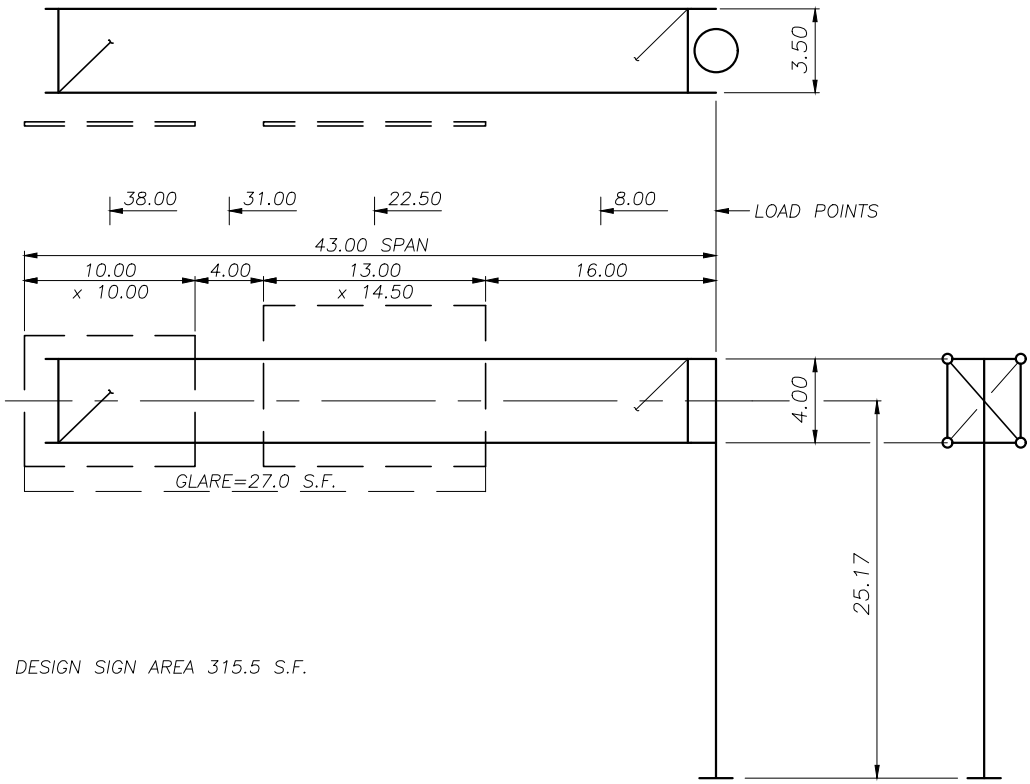

DESIGN SIGN AREA 315.5 S.F.

8 – 2.00"ø ANCHOR BOLTS

STR NO: OH–30
STA NO: 38+93.47(SB)

CHORDS	3.500 x 0.216
VERTICAL DIAGONALS	1.660 x 0.140
VERTICAL STRUTS	1.660 x 0.140
HORIZ STRUTS & DIAG'S	1.900 x 0.200
POST	30.000 x 0.375

SOUTH CAROLINA
LICENSED PROFESSIONAL ENGINEER
No. 35290
ROBERT R WIGINTON

Robert R Wiginton

Jul 3 2024

Box Truss Cantilever Structure Design

Reference Walpar Job Number : C3546
Reference Design Information Sheet Number : C4 Structure : OH-30 Station : 38+93.47(SB)
State : SC
AASHTO Specification : 6th Edition Fatigue Category : II
Design Wind Velocity (V) : 100 mph

Structure Dimensions

Span (S)	43.00 ft	Truss Hgt (U)	4.00 ft	Truss Depth (Y)	3.50 ft
Post Hgt (H)	25.17 ft	Coeff of Hgt (Kz)	1.00		

Sign Information

Actual Sign Area: 315.50 sq ft

Sign	Load (i)	Lgth (B_i)	Hgt (D_i)	Location (a_i)	Unit wgt	Depth	C_d	Z Ecc	Area	Exit Panel
1	2	13.00	15.50	22.50	7.00		1.13	6.00	201.50	
2	4	10.00	11.00	38.00	7.00		1.13	6.00	114.00	X

Walkway Information

	Lgth	Location	Width	Unit wgt	Y Ecc
WW1	34.50	25.75	2.54	60	5.07
WW2					

Load Summary Estimate

Weight of truss only	2617 lbs
Weight of truss with signs	4826 lbs
Post weight †	4041 lbs

† includes additonal wgt from base plate



Jul 3 2024

1

Walpar (c) 2014

Box Truss Cantilever Structure Design

Job No : C3546 Structure No : OH-30 Station : 38+93.47(SB)

Loads

Unit wind load on sign(s)/C_d: 29.18 psf Unit wind load on exposed truss: 35.02 psf Unit wgt of truss: 50.93 plf Unit ice wgt on truss: 20.92 plf

Truss Area for Wind Load (A_t): 0.91 sq ft / ft ***All loads in charts in lbs, ft or ft-lbs unless noted**

Truss Load Summary For Actual Sign & WW Condition

	Load (i)	Dead	Wind (W_p & W_h)	Ice
Sign and Truss Loads	1	815	510	335
	2	2073	6665	876
	3	204	128	84
	4	1307	3773	551
WW Loads	WW1	2070	737	921
Post Reaction (R_L)		6469	11813	2767
Truss Moments (M)		162448	320348	69644

** WW/Equipment Loads are incorporated into Sign and Truss Loads to determine Reactions and Moments.

Post Loads

Dead	Wind	Ice	Group II t_c	Group III t_c
3723	892	640	178	268

Load Combinations for Design Sign Area (Max Condition)

Truss Member Loads	DL	DL +WL	DL+1/2 WL+IL
Truss Chords (Pc)	20306	66070	51893
Vertical Diagonals (Pv)	11225	11225	17234
Horizontal Diagonals (Ph)	4236	10144	5715
Vertical Struts (Psv)	7745	9306	11890
Horizontal Struts (Psh)	3947	5906	6364

	Post Loads					
	M_N	M_{tc}	M_z/Torsion	V_N	V_{tc}	Axial
Group II Comb. 1 (DL+WL)	325226	226395	326692	12839	2541	10192
Group III Comb. 1 (DL+1/2WL+IL)	165361	263032	163346	6487	1270	13599
Group II Comb. 2 (DL+WL)	200685	255269	214896	7757	3811	10192
Group III Comb. 2 (DL+1/2WL+IL)	101148	278502	107448	3946	1906	13599

Serviceability Requirements

Truss DL Deflection	0.87 in.
Total DL Deflection	3.61 in.
Limit for Deflection	3.44 in.
Camber Used (Cu)	5.38 in.
Permanent Camber (Cp)	4.50 in.
Post Tilt	0.93 in.
Post Deflection Limits	8.15 in.
D^2/400 Limit	5.67 in.
Horizontal WL Deflection	3.94 in.
Horizontal Defl Limits	12.90 in.



Jul 3 2024

1

C4 - 2 of 6

Walpar (c) 2014

Box Truss Cantilever Structure Design

Job No : C3546 Structure No : OH-30 Station : 38+93.47(SB)

Material Information

	Pipe Size (Min Yield)	Unbraced Lgth	CSR Group II	CSR Group III
Truss Chords	3.500 x 0.216 (52 ksi)	8.39 ft	0.95	0.75
Vertical Diagonals	1.660 x 0.140 (52 ksi)	5.80 ft	0.54	0.83
Vertical Struts	1.660 x 0.140 (52 ksi)	4.00 ft	0.60	0.77
Horizontal Diagonals	1.900 x 0.200 (52 ksi)	5.46 ft	0.56	0.32
Horizontal Struts	1.900 x 0.200 (52 ksi)	3.50 ft	0.19	0.21
Post	30.000 x 0.375 (52 ksi)	27.17 ft	0.57	0.38

Structure Detail Information

Truss to Post Connection

Connection Bolt Qty & Size	10 - ¾" ø A325
Connection Plate Weld "A"	¼ fillet
Connection Plate Weld "B"	3/16 fillet
Connection Plate Welds "C"&"D"	3/16 fillet

Post Detail

Maximum Anchor Bolt Pullout	64574 lbs
Anchor Bolt Circle	36 in. Dia
Anchor Bolt Yield	55 ksi
Anchor Bolt Qty & Size	8 - 2" ø
Anchor Bolt Length (Embed Used)	4.50 ft (3.5 ft)
Anchor Bolt CSR	0.70
Base Plate Thickness	2 in.
Base Plate Weld	5/16 fillet
Gusset Plates at Base	8-¾" x 12"

Truss Chord Splices

Maximum Design Load at Splice	71276 lbs
Splice Moment (per in. of circum)	4051 in-lbs
Splice Bolt Circle	6.5 in.
Splice Bolt Qty & Size	4 - 7/8" ø A325
Splice Plate Thickness	0.75 in.
Splice Plate Weld	¼ fillet

ACI 318 App D checked with Min. Req'd Embed 2.32 ft

Sign Hanger Detail

Design hanger spacing 9.00 ft

Sign Hanger U-Bolt type ASTM-A307

SIGN	Max UBL at End	Max Spacing	Hanger U-Bolt	Sign Hanger	Hanger Support
1	4.00 ft	9.00 ft	2 - ½" ø	L5x3x5/16	W6x9
2	4.00 ft	9.00 ft	2 - ½" ø	L5x3x5/16	W6x9

Structure Input (For Foundation Designs)

Sign DL React (DLS)	4.28 k
Truss DL React (DLT)	2.19 k
Post DL React (DLP)	3.72 k
Truss WL React (Wh)	0.64 k
Truss WL React (Wp)	11.07 k
Post WL React (Wv)	0.89 k
Dist. To DLS & Wp (L1)	28.10 ft
Distance To Wh (L2)	21.50 ft
Distance To Rh (H1)	25.17 ft
Distance To Wv (H2)	13.58 ft
Torque at Base (Mt)	326.7 k-ft
Min Ped Wth (PL & PW)	4.50 ft



Jul 3 2024

1

C4 - 3 of 6

Walpar (c) 2014

Box Truss Cantilever Structure Design

Job No : C3546 Structure No : OH-30 Station : 38+93.47(SB)

Vibration and Fatigue (Per AASHTO 6th Edition)

Natural Wind Gust Load on Signs/C_d 4.42 psf
Natural Wind Gust Load on Truss 5.30 psf

Truck Induced Gust Load on Truss 16.37 psf
Extent of Truck Induced Gust 12.00 ft
Truss Area for Truck Induced Gust 0.90 sq ft / ft
Location of Center of Truck Induced Gust 37.00 ft

Truss Load Summary for Vibration and Fatigue

Loads (i)	NWG(i)	TIG(i)
1	77	
2	1009	
3	19	
4	571	177
WW1	349	561
Post Reaction	2026	738
Maximum Moments	54623	27324

Member Forces for Vibration and Fatigue

Truss Members	P_{NWG}	P_{TG}
Truss Chords	7803	3415
Vertical Diagonals	-	535
Horizontal Diagonals	1582	-
Vertical Struts	-	369
Horizontal Struts	1013	-

	Post Loads at Base				
	M_N	M_Y	M_z/Torsion	V_N	Axial
Natural Wind	55477	-	54623	2356	-
Truck Induced Gust	-	27324	-	-	738

Vibration and Fatigue Stresses

	NWG (ksi)	TIG (ksi)	Allowable (ksi)
Post/Truss Connection	1.38	0.61	2.60
Truss Vertical Diagonals	-	0.55	1.20
Truss Horizontal Diagonals	0.95	-	1.20
Truss Vertical Struts	-	0.55	1.20
Truss Horizontal Struts	0.95	-	1.20
Post Base Connection	1.17	0.58	7.00
Base Stiffener Termination	2.61	1.29	7.00
Anchor bolts	6.00	3.03	7.00



Jul 3 2024

1

Walpar (c) 2014

Box Truss Cantilever Structure Design

Job No : C3546 Structure No : OH-30 Station : 38+93.47(SB)

Foundation Design

Boring Type SPT Boring Designation G-217
Major Soil Type Cohesive Depth to Water NA Surcharge (Frost) Depth 2 ft
Ground Slope 4:1 Consider slope stability? Y

SOIL TYPES	
01-GP	07-SM
02-GW	08-ML
03-GM	09-MH
04-GC	10-SC
05-SP	11-CL
06-SW	12-CH

Soil Properties

Depth	N Value	γ' (pcf)	Φ (deg)	S_u (lbf/ft^2)	α	β	f_{SN} (lbf/ft^2)	$(N_1)_{60}$	Soil Type
**0 - 4	19	124	30	2375	0.55		1306	38	11
4 - 6	40	145	33	4000	0.55		2200	80	11
6 - 8	27	123	31	3375	0.55		1856	54	09
8 - 13.5	34	134	31	4000	0.55		2200	68	09
13.5 - 18.5	28	125	29	3500	0.55		1925	46	09
18.5 - 20	17	108	27	2125				30	09
20 - 35	17	108	25	2125				18	09

* Soil Type 13 indicates rock layer with N>60 for cohesionless soil or N>40 for cohesive soils
**Top 2.0 ft will not contibute to any load resistance + 1 diameter at bottom will not contribute to frictional load resistance.



Jul 3 2024

1

Walpar (c) 2014

Box Truss Cantilever Structure Design

Job No : C3546 Structure No : OH-30 Station : 38+93.47(SB)

Cantilever Cylindrical Footing Design

Material/Soil Specifications and Safety Factors

Concrete f '$_c$:	3000 psi	Concrete wgt :	150 pcf
Rebar yield f_y :	60000 psi	Min safety factor for torsion :	1.13
Reinforcement Clear :	4 in	Min safety factor for lateral load :	2.86

Loads and Locations From Structure

Sign DL React (DLS)	4.28 k	Dist. To DLS & Wp (L1)	28.10 ft
Truss DL React (DLT)	2.19 k	Distance To Wh (L2)	21.50 ft
Post DL React (DLP)	3.72 k	Distance To Rh (H1)	25.17 ft
Truss WL React (Wh)	0.64 k	Distance To Wv (H2)	13.58 ft
Truss WL React (Wp)	11.07 k	Footing Projection (H3)	1.00 ft
Post WL React (Wv)	0.89 k	Torque at Base (M_t)	326.7 ft-k

Loads at Top of Cylinder from Structure

Dead Load Moment (MDL)	230.72 ft-k	Effective height (Heff)	24.35 ft
Wind Load Moment (MWL)	306.68 ft-k	Lateral load from MDL (PDL)	2.52 k
Resultant Moment (MR)	395.09 ft-k	Resultant Lateral Load (PRL)	16.23 k
Wind Load Shear at Base (PWL)	12.60 k	Total Dead Load at Column Base (TDL)	10.19 k
Transverse Load (t_c)	2.52 k		

Torsion Calculation Results
(from Beta Method)

Cylinder Embedment	11.50 ft
Axial load	10.19 k
Torsional load	326.69 ft-k
Weight of shaft	40.56 k
Max Allow Torque on reinf CYL	418.62 ft-k
Side Resist. Capacity	260.5 k
Allowable side resist. torque	586.07 ft-k
Avg Su for Tip Resist. (ksf)	3.75
Tip Resist. Capacity	536.77 k
Allowable Tip Resist. Torque	38.6 ft-k
	0.0 ft-k
Total Allowable Torque	624.7 ft-k
Calc'd Torsional safety factor	1.91

Lateral Load Calculation Results
(from Brom's Method)

Soil friction angle Φ	31.4 deg
Soil unit weight γ	132 pcf
AVG $(N_1)_{60}$ over req'd dp (BPF)	88
Lateral load from structure	16.2 k
Moment from structure	395.1 ft-k
Rankine Passive Pressure Coeff. K_P	11.75
Ultimate soil resistance P_{ult}	1319 k
Allowable soil resistance P_{max}	614 k
Ultimate soil mom cap M_{ult}	5313 ft-k
Allowable soil mom cap M_{max}	2471 ft-k
Ground line moment	411 ft-k
Dist GL to 0 shear pt in CYL	3.24 ft
Maximum moment in shaft	444 ft-k

Final Cylindrical Footing Design Sizes

Req'd A_s	12.78 in²	Rebar Cage Dia (D1)	43.48 in
1% Cyl Area Min A_m	22.90 in²	Vertical bar spacing	7.19 in
Reinf Area Provided A_p	24.13 in²		

USE 54 in DIA x 17'-0 CYLINDER
w/ 19- # 10 VERT. BARS & 19 - #5 HOOPS
Extra Hoop 3 inches below top hoop

Serviceability

Calculated torsional / axial safety factors = 1.91 / 15.71
Calculated lateral safety factor = 11.97

Quantities

1601 lbs of reinforcement
10.01 cyd of concrete



Jul 3 2024

1

C4 - 6 of 6

Walpar (c) 2014